What's Going On?

Checking In

Minds on Surface Area Formulas

Action! Surface Area Formulas Revisited

Consolidation Surface Area 2.0

Learning Goal - I will be able to calculate the surface area of geomeric solids and composite figures.

Minds on

What's the Length?

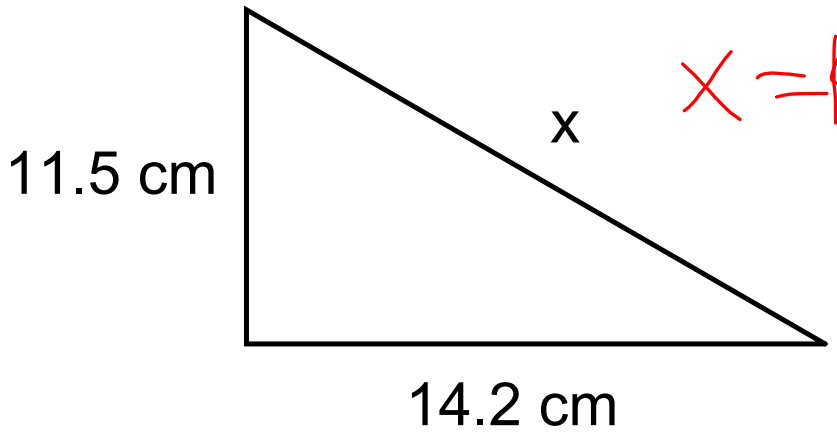

x = 18.3

Minds on

What's the Length?

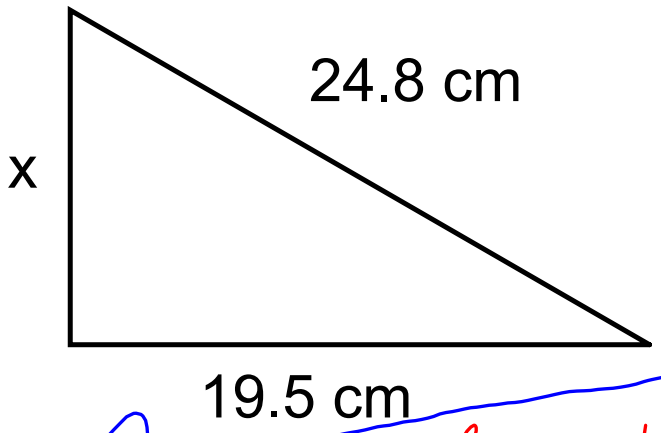

$\sqrt{x^2} = \sqrt{24.8^2 - 19.5^2}$

$x = \sqrt{24.8^2 - 19.5^2}$

$x = 15.3\text{cm}$

Minds on

Surface Area Formulas

Rectangular prism

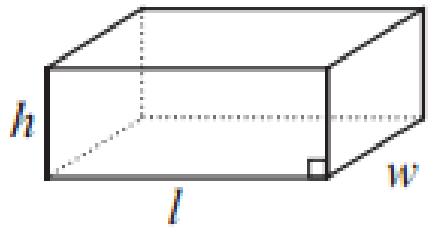

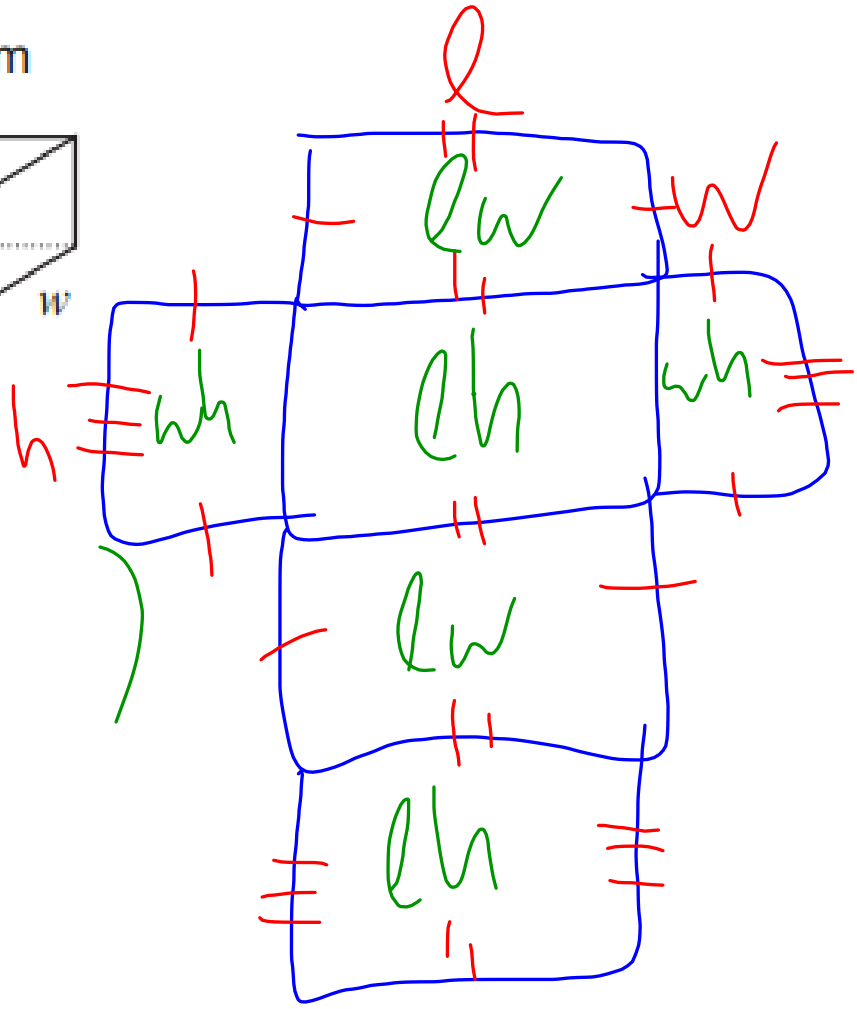

2( )

Minds on

Surface Area Formulas

Triangular prism

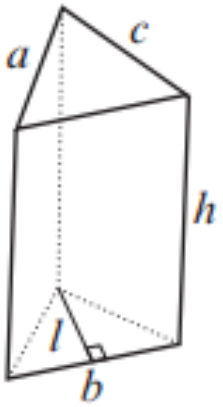

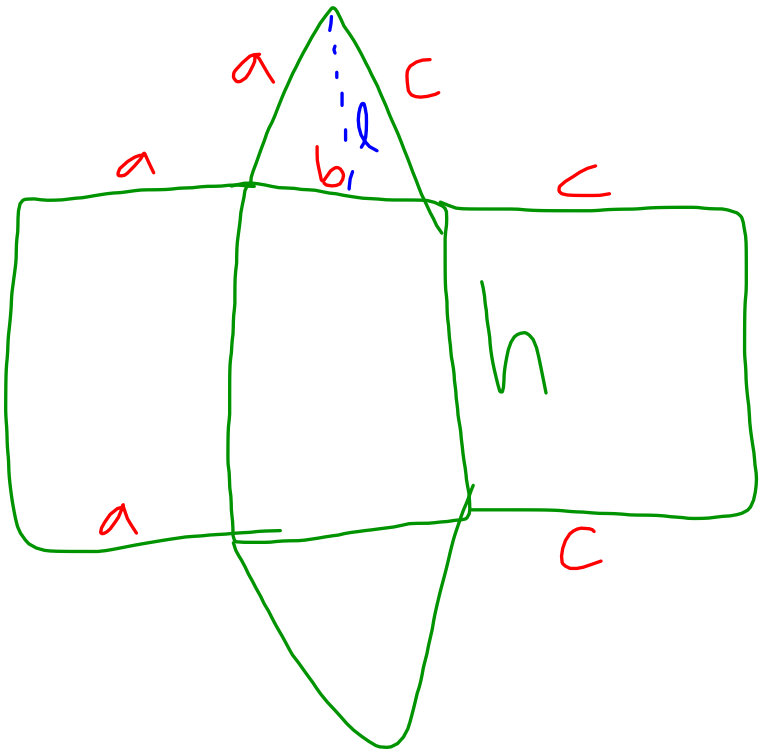

Minds on

Surface Area Formulas

Cylinder

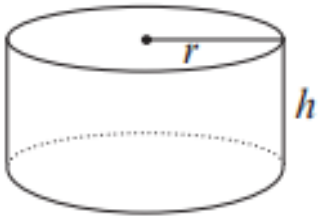

$$\underbrace{\pi r^2 + \pi r^2}_{2\pi r^2}$$

$$2\pi r^2 + 2\pi r h$$

Minds on

Surface Area Formulas

Cylinder

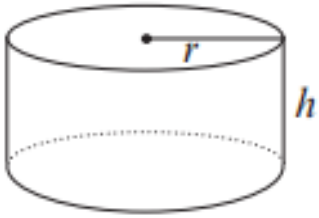

lateral face - surface of a three-dimensional object that is not a base.

Action!

Surface Area Formulas Revisited

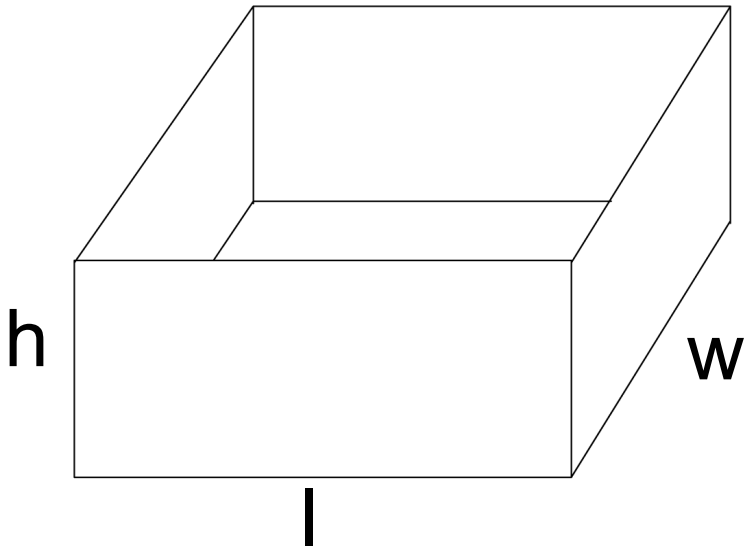

What is the surface area of this topless box?

$SA = 2(lw + lh + wh) - lw$

$SA = 1lw + 2lh + 2wh$

Action!

Surface Area Formulas Revisited

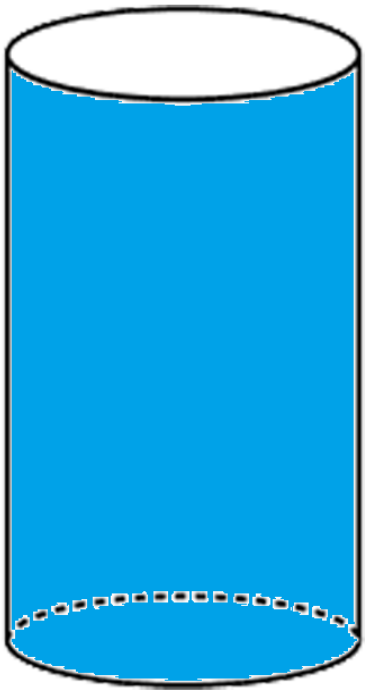

What is the surface area of this cylinder? (no top)

$SA = \pi r^2 + 2\pi r h$

Action!

Surface Area Formulas Revisited

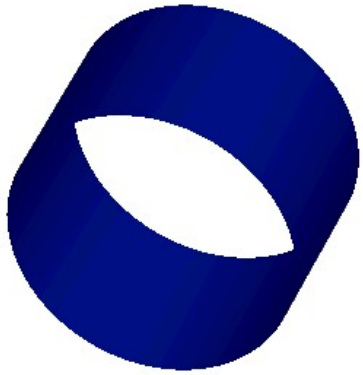

What is the surface area of this cylinder? (no top or bottom!)

$SA = \cancel{2\pi r^2} + 2\pi r h$

Consolidation

Surface Area 2.0

The outside of the object below is going to be painted. Determine the surface area to be painted. Do not include the bottom.

Start by sketching a net diagram including all of the surfaces that will be painted.

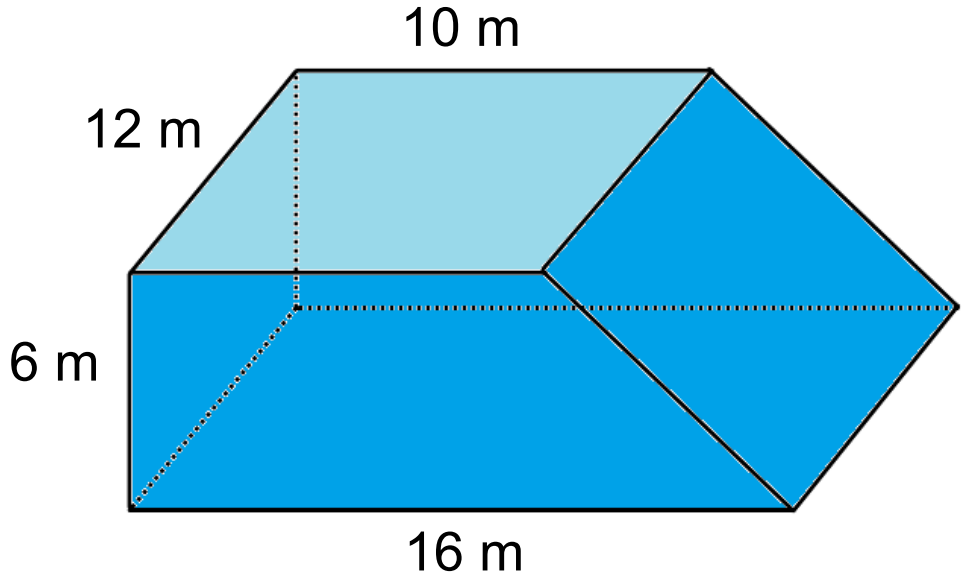

Consolidation

Homework

Pg. 32 - 35

3, 5 - 9, 11 - 13

*Want a challenge? Try **any** of the extend problems.

Today: #14 looks good!